Work Order ID 53727

November 13, 2009 1:53:42 PM

Item ID: D3136-041
Revision ID: E
Item Name: Window Assembly

Accept

Setup Start
Stop

Start Date: 11/16/2009 **Start Qty:** 6.00
Required Date: ~~11/23/2009~~ **Req'd Qty:** 6.00
Reference: 11/16

Cust Item ID:
Customer:

Run Start
Stop

Approvals: **Process Plan:** MF **Date:** 09-11-13 **Tooling:** _____ **Date:** _____
QC: _____ **Date:** _____ **SPC (Y/N):** _____ **Date:** _____

Draw Nbr	Revision Nbr
D3136	Rev E

Sequence ID/ Work Center ID	Operation Description	Set Up/ Run Hours	Draw Number	Draw Rev.	Plan Code	Accept Qty	Reject Qty	Reject Number	Insp. Stamp
100	FLOW WATER JET	0.00							
Waterjet	Memo	0.00							
FLOW CNC Waterjet									
110	QC2- Inspect parts off machine FAI/FAIB	0.00							
QC	Memo	0.00							
Quality Control									
120	QC8- Inspect parts - second check	0.00							
QC	Memo	0.00							
Quality Control									

E
E

3

RB 9-11-16

RB 9-11-16

=> 5 07/14/11

x3

Dart Aerospace Ltd

W/O:		WORK ORDER CHANGES					
DATE	STEP	PROCEDURE CHANGE	By	Date	Qty	Approval Chief Eng / Prod Mgr	Approval QC Inspector

Part No: _____ **PAR #:** _____ **Fault Category:** _____ **NCR:** Yes No **DQA:** _____ **Date:** _____

Resolution: _____ **Disposition:** _____ **QA: N/C Closed:** _____ **Date:** _____

NCR:		WORK ORDER NON-CONFORMANCE (NCR)						
DATE	STEP	Description of NC Section A	Corrective Action Section B			Verification Section C	Approval Chief Eng	Approval QC Inspector
			Initial Chief Eng	Action Description Chief Eng	Sign & Date			

NOTE: Date & initial all entries

H:\fFORMS\Quality Assurance\approved QA\NCRWO RevE

Work Order ID 53727

November 13, 2009 1:53:42 PM

Item ID: D3136-041
Revision ID: E
Item Name: Window Assembly

Accept

Setup Start
Stop

Start Date: 11/16/2009 **Start Qty:** 6.00
Required Date: 11/23/2009 **Req'd Qty:** 6.00
Reference:

Cust Item ID:
Customer:

Run Start
Stop

Approvals: **Process Plan:** _____ **Date:** _____ **Tooling:** _____ **Date:** _____
QC: _____ **Date:** _____ **SPC (Y/N):** _____ **Date:** _____

Sequence ID/ Work Center ID	Operation Description	Set Up/ Run Hours	Draw Number	Draw Rev.	Plan Code	Accept Qty	Reject Qty	Reject Number	Insp. Stamp
130 Thermoform Thermoforming Machine	THERMOFORMING MACHINE **Memo** 1-Thermoform as per Dwg D3136 and Folio FTA006☐Dwg Rev. E ☐Folio Rev. C ☐2- Engrave Part # and Batch # , and affix labels ☐(D3108-9)	0.00 0.00						Wh 09/11/16	KB
140 QC Quality Control	QC2- Inspect parts off machine FAI/FAIB **Memo**	0.00 0.00						Wh 09/11/16	KB
150 QC Quality Control	QC8- Inspect parts - second check **Memo**	0.00 Sa 9/11/16 0.00							

Dart Aerospace Ltd

W/O:		WORK ORDER CHANGES					
DATE	STEP	PROCEDURE CHANGE	By	Date	Qty	Approval Chief Eng / Prod Mgr	Approval QC Inspector

Part No: _____ **PAR #:** _____ **Fault Category:** _____ **NCR:** Yes No **DQA:** _____ **Date:** _____

Resolution: _____ **Disposition:** _____ **QA: N/C Closed:** _____ **Date:** _____

NCR:		WORK ORDER NON-CONFORMANCE (NCR)						
DATE	STEP	Description of NC Section A	Corrective Action Section B			Verification Section C	Approval Chief Eng	Approval QC Inspector
			Initial Chief Eng	Action Description Chief Eng	Sign & Date			

NOTE: Date & initial all entries

H:\fFORMS\Quality Assurance\approved QA\NCRWO RevE

Work Order ID 53727

November 13, 2009 1:53:42 PM

Item ID: D3136-041
Revision ID: E
Item Name: Window Assembly

Accept

Setup Start
Stop

Start Date: 11/16/2009 **Start Qty:** 6.00
Required Date: 11/23/2009 **Req'd Qty:** 6.00
Reference:

Cust Item ID:
Customer:

Approvals: **Process Plan:** _____ **Date:** _____ **Tooling:** _____ **Date:** _____
QC: _____ **Date:** _____ **SPC (Y/N):** _____ **Date:** _____

Run Start
Stop

Sequence ID/ Work Center ID	Operation Description	Set Up/ Run Hours	Draw Number	Draw Rev.	Plan Code	Accept Qty	Reject Qty	Reject Number	Insp. Stamp
160	HAND FINISHING THERMOFORMING	0.00							
Thermoform	**Memo**	0.00							
Thermoforming Machine	Water sand and buff to remove scratches as required								
170	QC5- Inspect part completeness to step on W/O	0.00							
QC	**Memo**	0.00							
Quality Control									
180	Identify as per dwg & Stock Location: 215	0.00							
Packaging	**Memo**	0.00							
Packaging									

Dart Aerospace Ltd

W/O:		WORK ORDER CHANGES						
DATE	STEP	PROCEDURE CHANGE		By	Date	Qty	Approval Chief Eng / Prod Mgr	Approval QC Inspector

Part No: _____ **PAR #:** _____ **Fault Category:** _____ **NCR:** Yes No **DQA:** _____ **Date:** _____

Resolution: _____ **Disposition:** _____ **QA: N/C Closed:** _____ **Date:** _____

NCR:		WORK ORDER NON-CONFORMANCE (NCR)						
DATE	STEP	Description of NC Section A	Corrective Action Section B			Verification Section C	Approval Chief Eng	Approval QC Inspector
			Initial Chief Eng	Action Description Chief Eng	Sign & Date			

NOTE: Date & initial all entries

H:\fFORMS\Quality Assurance\approved QA\NCRWO RevE

Work Order ID 53727

November 13, 2009 1:53:42 PM

Item ID: D3136-041
Revision ID: E
Item Name: Window Assembly

Accept

Setup **Start**
Stop

Start Date: 11/16/2009 **Start Qty:** 6.00
Required Date: 11/23/2009 **Req'd Qty:** 6.00
Reference:

Cust Item ID:
Customer:

Run **Start**
Stop

Approvals: **Process Plan:** _____ **Date:** _____ **Tooling:** _____ **Date:** _____
QC: _____ **Date:** _____ **SPC (Y/N):** _____ **Date:** _____

Sequence ID/ Work Center ID	Operation Description	Set Up/ Run Hours	Draw Number	Draw Rev.	Plan Code	Accept Qty	Reject Qty	Reject Number	Insp. Stamp
190	QC21- Final Inspection - Work Order Release	0.00							09/11/17
QC Quality Control	**Memo**	0.00							

MF
09-11-17

Dart Aerospace Ltd

W/O:		WORK ORDER CHANGES					
DATE	STEP	PROCEDURE CHANGE	By	Date	Qty	Approval Chief Eng / Prod Mgr	Approval QC Inspector

Part No: _____ **PAR #:** _____ **Fault Category:** _____ **NCR:** Yes No **DQA:** _____ **Date:** _____

Resolution: _____ **Disposition:** _____ **QA: N/C Closed:** _____ **Date:** _____

NCR:		WORK ORDER NON-CONFORMANCE (NCR)						
DATE	STEP	Description of NC Section A	Corrective Action Section B			Verification Section C	Approval Chief Eng	Approval QC Inspector
			Initial Chief Eng	Action Description Chief Eng	Sign & Date			

NOTE: Date & initial all entries

H:\fFORMS\Quality Assurance\approved QA\NCRWO RevE

Picklist Print

November 13, 2009 1:53:42 PM

Work Order ID: 53727

Parent Item: D3136-041RevE

Parent Item Name: Window Assembly

Comments:

Start Date: 11/16/2009 **Required Date:** 11/23/2009

Start Qty: 6.00 **Required Qty:** 6.00

Component Item ID/ Item Name	Replacement Item ID	Mfg/ Purch	Bin Item	Primary Location	Last Location	Route Seq ID	Unit of Measure	Qty on Hand	Remaining Qty To Pick	Qty Issued	Date Issued	Status
D3108-9RevB1		Manufactured	No			100	Each	792.0000	12.0000			
Decal												

Warehouse Location	Loc Qty	Loc Code
Main Warehouse		
ST	792	
34554	304	
46546	488	

6 DL 09/11/16 (48)

Component Item ID/ Item Name	Replacement Item ID	Mfg/ Purch	Bin Item	Primary Location	Last Location	Route Seq ID	Unit of Measure	Qty on Hand	Remaining Qty To Pick	Qty Issued	Date Issued	Status
MACRLICS.125		Purchased	No			170	sf	128.7570	26.8421			
1/8" Polycast II Sheet												

HB 9-11-16

Warehouse Location	Loc Qty	Loc Code
Main Warehouse		
MAT	128.757	
110115	4	
110633	17.2295	
111711	67.7447	
112888	39.7828	112885

Dart Aerospace Ltd

W/O:		WORK ORDER CHANGES					
DATE	STEP	PROCEDURE CHANGE	By	Date	Qty	Approval Chief Eng / Prod Mgr	Approval QC Inspector

Part No: _____ **PAR #:** _____ **Fault Category:** _____ **NCR:** Yes No **DQA:** _____ **Date:** _____

Resolution: _____ **Disposition:** _____ **QA: N/C Closed:** _____ **Date:** _____

NCR:		WORK ORDER NON-CONFORMANCE (NCR)						
DATE	STEP	Description of NC Section A	Corrective Action Section B			Verification Section C	Approval Chief Eng	Approval QC Inspector
			Initial Chief Eng	Action Description Chief Eng	Sign & Date			

NOTE: Date & initial all entries

H:\fFORMS\Quality Assurance\approved QA\NCRWO RevE

DART AEROSPACE LTD	Work Order:	53727
Description: Window Assembly	Part Number:	D3136-1
Inspection Dwg: D3136 **Rev:** E		Page 1 of 1

FIRST ARTICLE INSPECTION CHECKLIST

[X] First Article [ ] Prototype

Drawing Dimension	Tolerance	Actual Dimension	Accept	Reject	Method of Inspection	Comments
27.50	+/-0.030	27.50	*			
22.63	+/-0.030	22.625	*			
3.70	+/-0.030	3.70	*			
0.06	+/-0.030	.075	*			

Measured by:	HB	Audited by:	S	Prototype Approval:	N/A
Date:	9-11-16	Date:	02/11/16	Date:	N/A

Rev	Date	Change		Revised by	Approved
A	09.05.04	New Issue	P/O D3136-041	KJ/DD	

Dart Aerospace Ltd

W/O:		WORK ORDER CHANGES					
DATE	STEP	PROCEDURE CHANGE	By	Date	Qty	Approval Chief Eng / Prod Mgr	Approval QC Inspector

Part No: _____ **PAR #:** _____ **Fault Category:** _____ **NCR:** Yes No **DQA:** _____ **Date:** _____

Resolution: _____ **Disposition:** _____ **QA: N/C Closed:** _____ **Date:** _____

NCR:		WORK ORDER NON-CONFORMANCE (NCR)						
DATE	STEP	Description of NC Section A	Corrective Action Section B			Verification Section C	Approval Chief Eng	Approval QC Inspector
			Initial Chief Eng	Action Description Chief Eng	Sign & Date			

NOTE: Date & initial all entries

H:\fFORMS\Quality Assurance\approved QA\NCRWO RevE

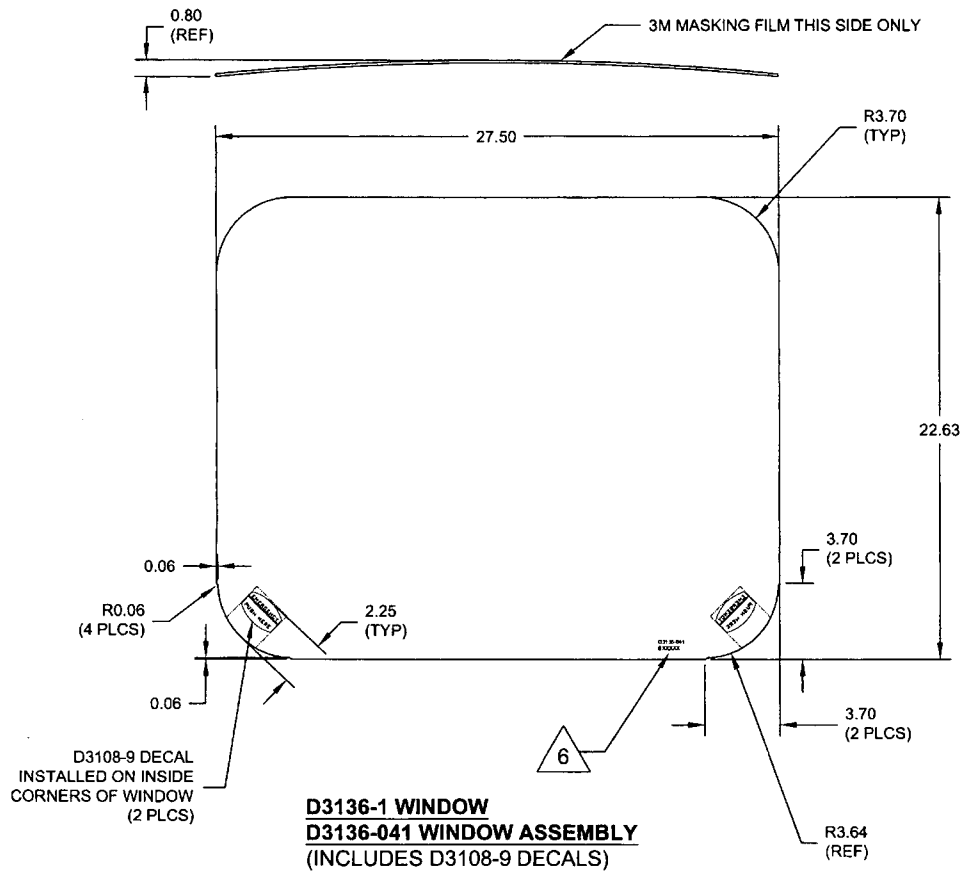

D3136-1 WINDOW
D3136-041 WINDOW ASSEMBLY
(INCLUDES D3108-9 DECALS)

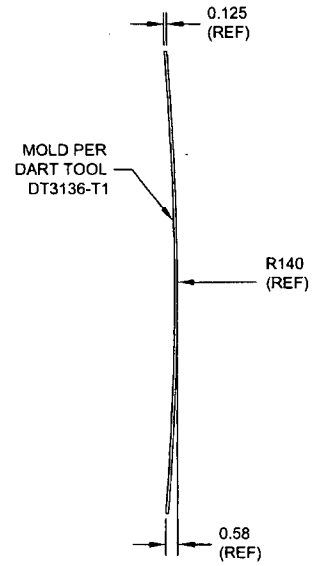

#53727

RELEASED
07.09.22

NOTES:
1) MATERIAL: POLYCAST II CLEAR ACRYLIC SHEET FER MIL-P-5425 OR PLEXIGLAS G
CLEAR CAST ACRYLIC SHEET PER LP-391 TYPE 1 GRADE C, 0.125 THICK
2) FINISH: NONE
3) TOLERANCES: PER DART QSI 018 UNLESS OTHERWISE NOTED
4) UNITS: INCHES UNLESS OTHERWISE NOTED
5) REMOVE SHARP EDGES
6) IDENTIFICATION: ENGRAVE P/N "D3136-041" AND B/N ON LOWER EDGE
USE 0.125" HIGH LETTERS TO MAXIMUM DEPTH OF 0.005"
7) WEIGHT: 2.98 +/- 0.66 LBS
8) FORMING PROCESS: a) HEAT LARGER PIECE TO 250° F
b) DRAPE OVER D3136-T1 MOLD & CLAMP
c) LEAVE FOR 2 HOURS COVERED WITH INSULATED BLANKETS

REV.	DESCRIPTION	BY	DATE
E	REMOVE TRIM NOTE	DC	07.09.10
D	UPDATED MATERIAL NOTES	RF	05.12.01
C	ADDED FORMING & ENGRAVING SPEC	KJ	04.05.05
B	ADDED D3136-3 AND D3136-043	RF	04.01.21
A	NEW ISSUE	DS	02.04.18

DESIGN		**DART AEROSPACE LTD** HAWKESBURY, ONTARIO, CANADA	
DRAWN			
CHECKED		DRAWING NO.	REV. E
MFG. APPR.		D3136	SHEET 1 OF 2
APPROVED		TITLE	SCALE
DE APPR.		WINDOW ASSEMBLY	1:6
DATE	07.09.10		

Dart Aerospace Ltd

W/O:		WORK ORDER CHANGES					
DATE	STEP	PROCEDURE CHANGE	By	Date	Qty	Approval Chief Eng / Prod Mgr	Approval QC Inspector

Part No: _____ **PAR #:** _____ **Fault Category:** _____ **NCR:** Yes No **DQA:** _____ **Date:** _____

Resolution: _____ **Disposition:** _____ **QA: N/C Closed:** _____ **Date:** _____

NCR:		WORK ORDER NON-CONFORMANCE (NCR)						
DATE	STEP	Description of NC Section A	Corrective Action Section B			Verification Section C	Approval Chief Eng	Approval QC Inspector
			Initial Chief Eng	Action Description Chief Eng	Sign & Date			

NOTE: Date & initial all entries

H:\fFORMS\Quality Assurance\approved QA\NCRWO RevE